Reconstruction of Tai Po Kau Tide Gauge Station

Design Competition – Briefing Session

29.7.2020 (Wed)

土木工程拓展署
CEDD Civil Engineering and Development Department

Project Location

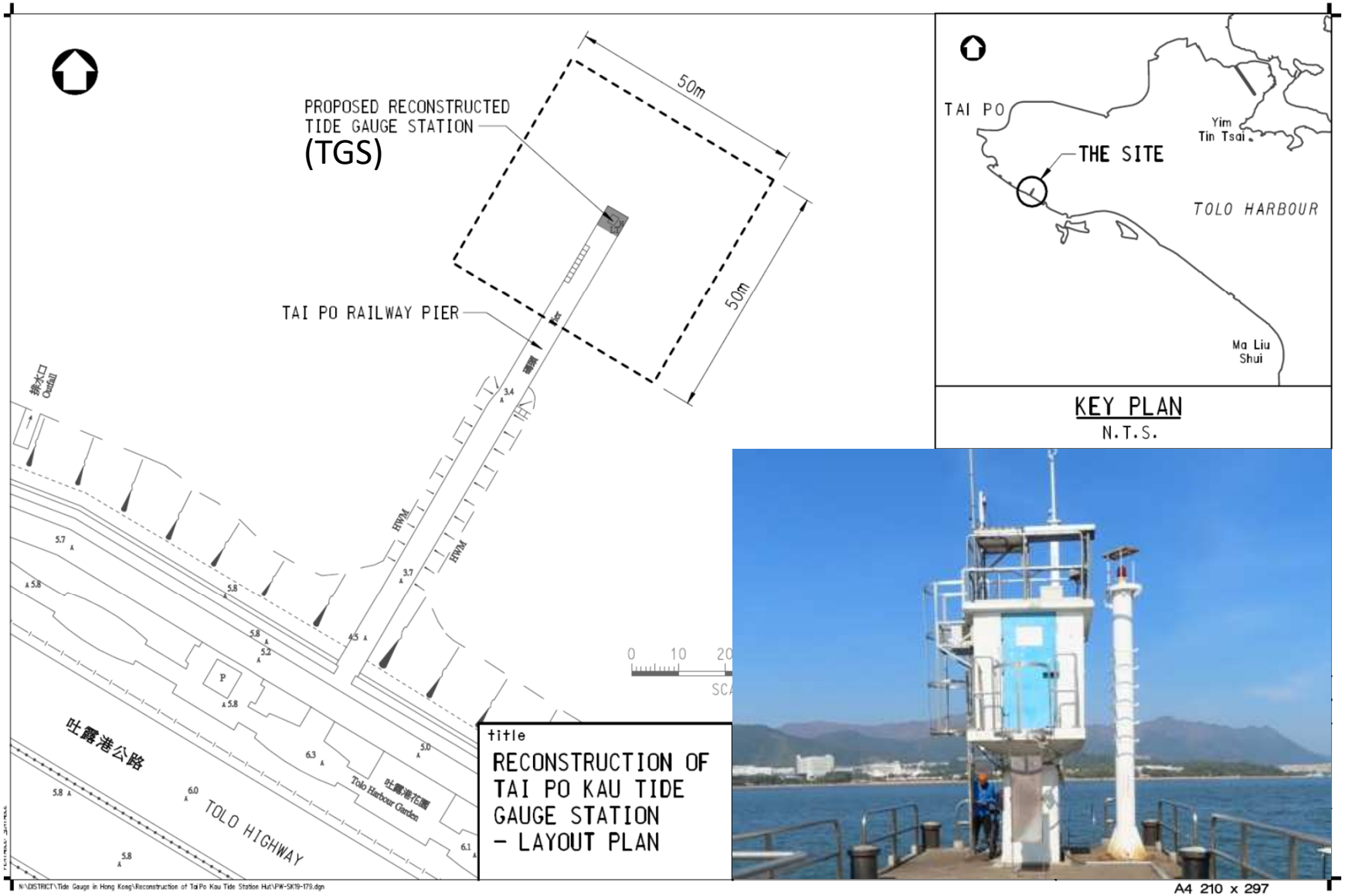

Project Scope

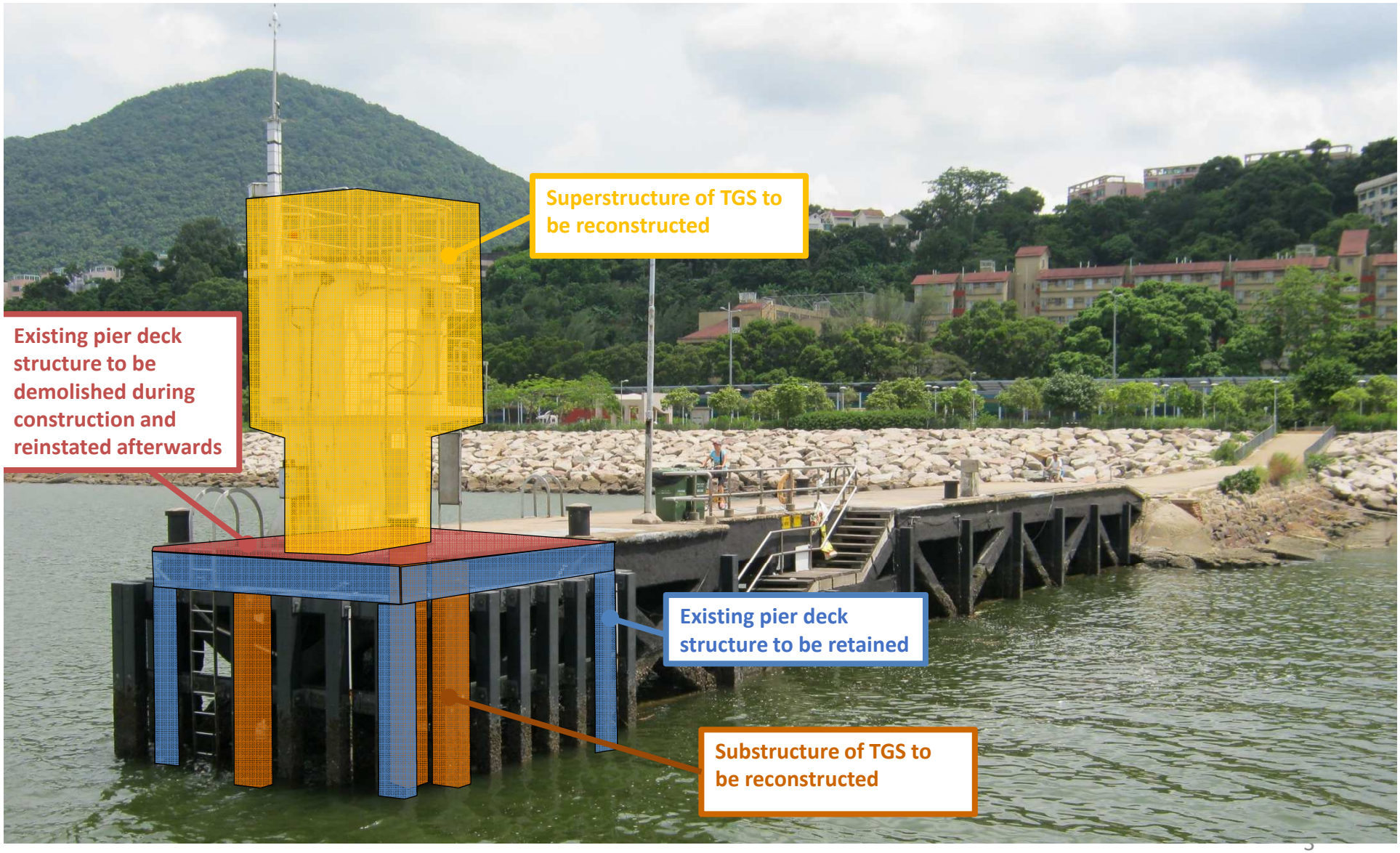

Demolition Sequence

Demolition

1. Superstructure of TGS
2. Pier Slabs and Beams
3. Stilling Well
4. Substructure of TGS
5. Piles of TGS

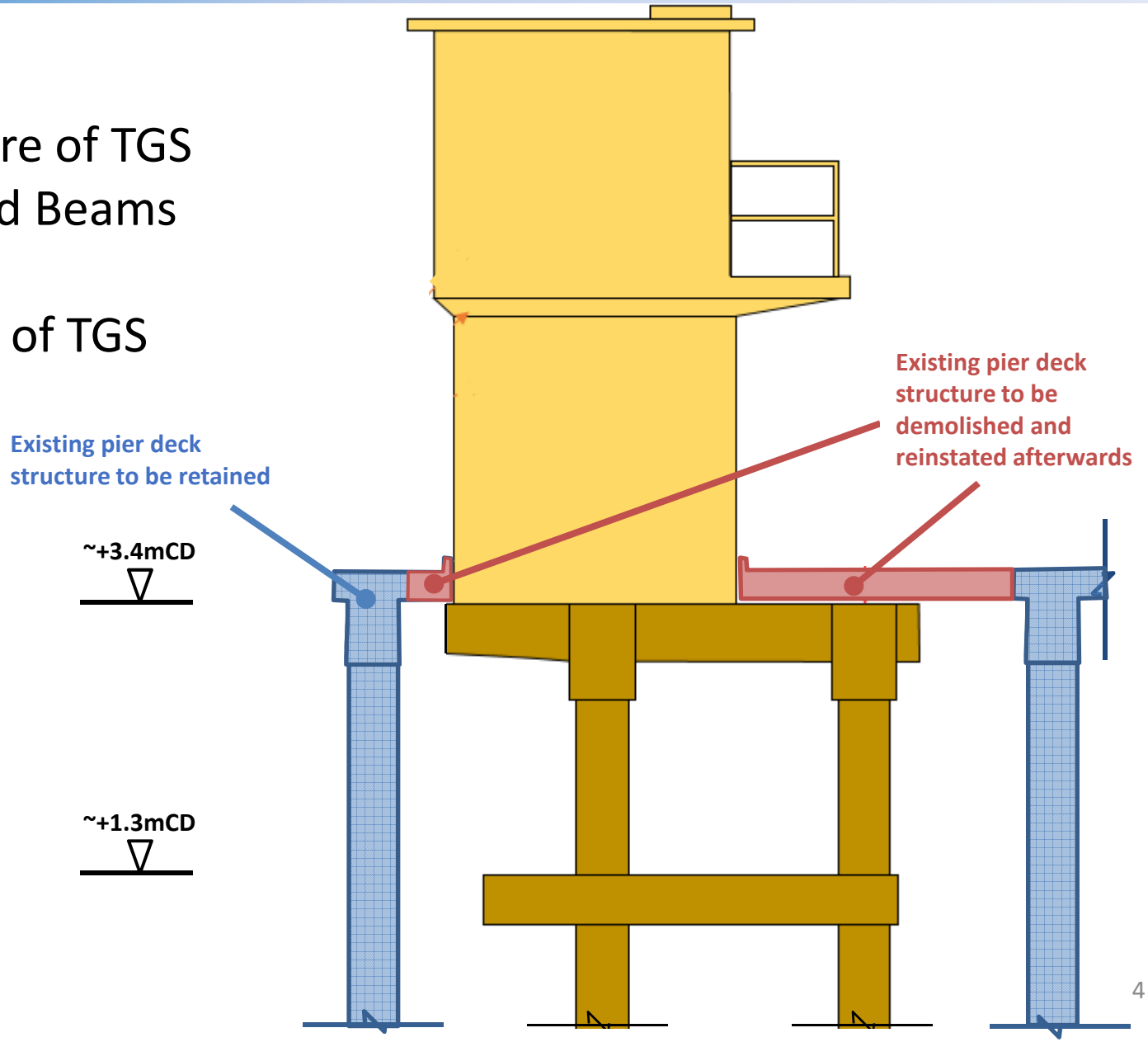

Demolition Sequence

Demolition

1. Superstructure of TGS
2. Pier Slabs and Beams
3. Stilling Well
4. Substructure of TGS
5. Piles of TGS

Sea side

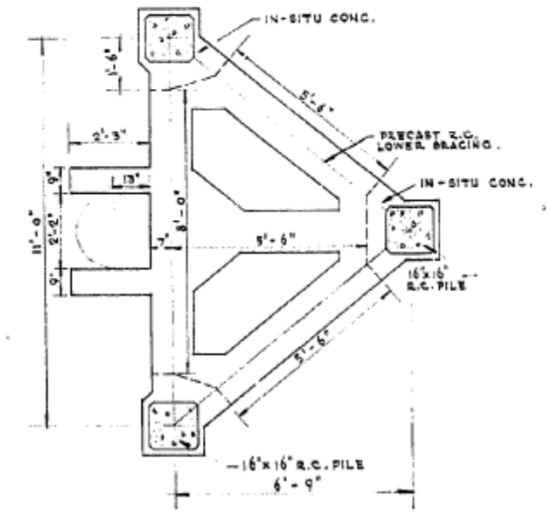

→ Pier Deck

Plan Showing Existing Substructure of TGS
(at approx. +1.3mCD)
(to be reconstructed)

Construction Sequence

Construction

1. Piles of TGS
2. Substructure of TGS
3. Stilling Well
4. Superstructure of TGS
5. Pier Slabs and Beams

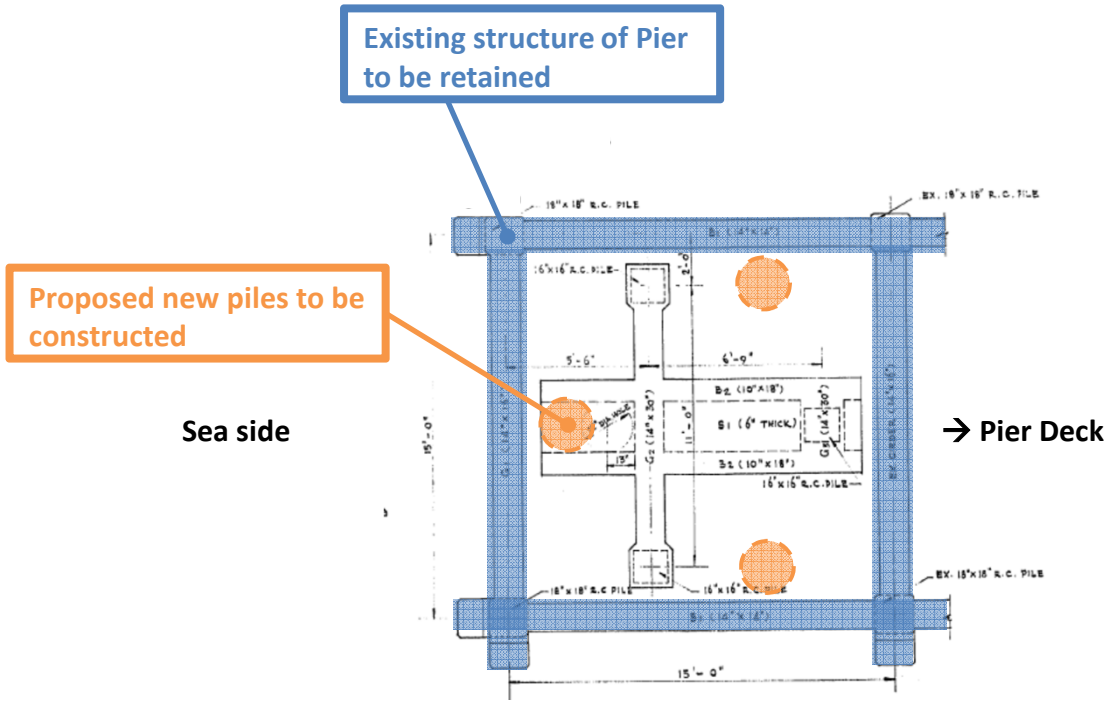

Plan
(at approx. +3.4mCD)

Design Requirements

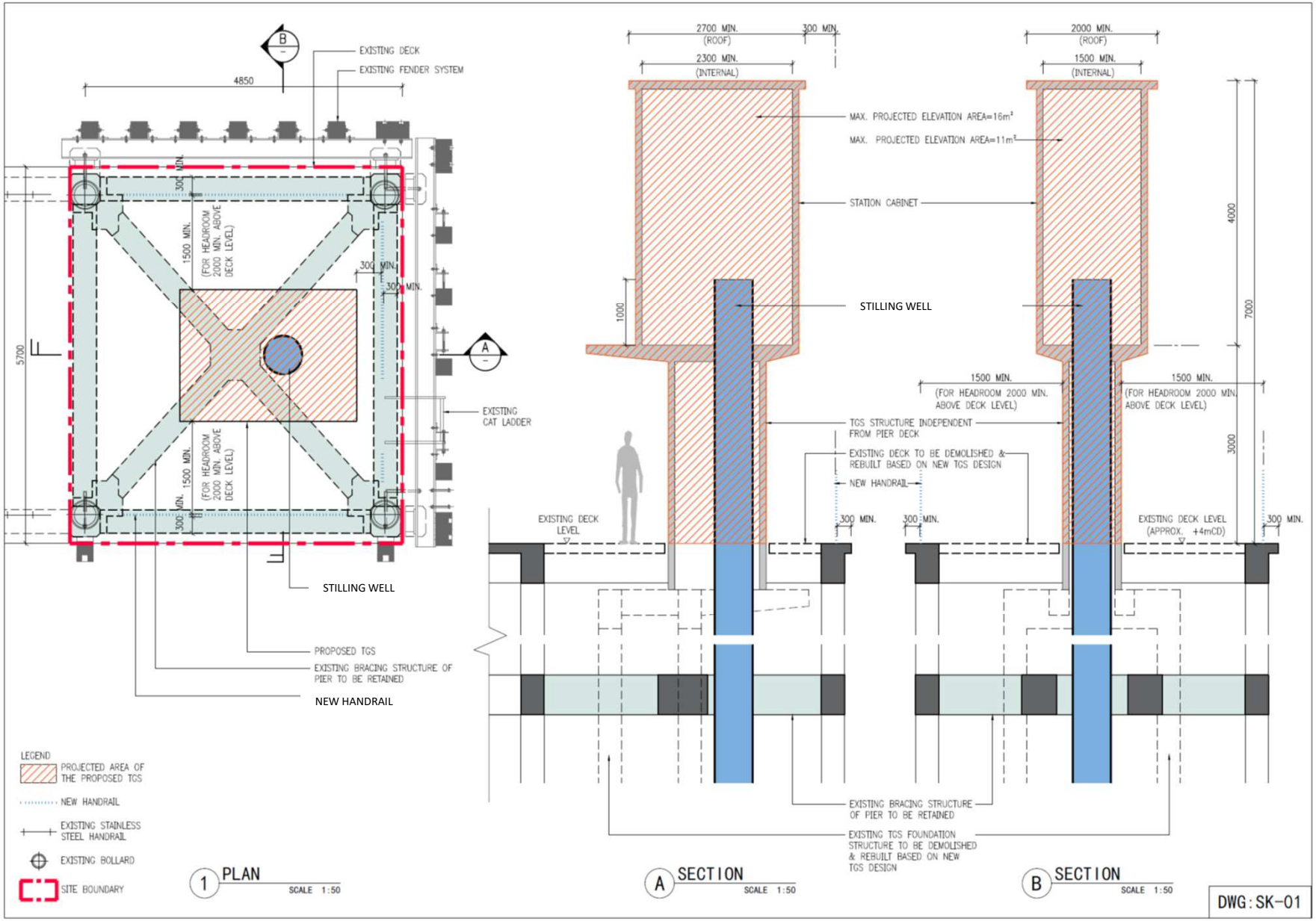

Thank You!